Model Name : MB-8324(U)

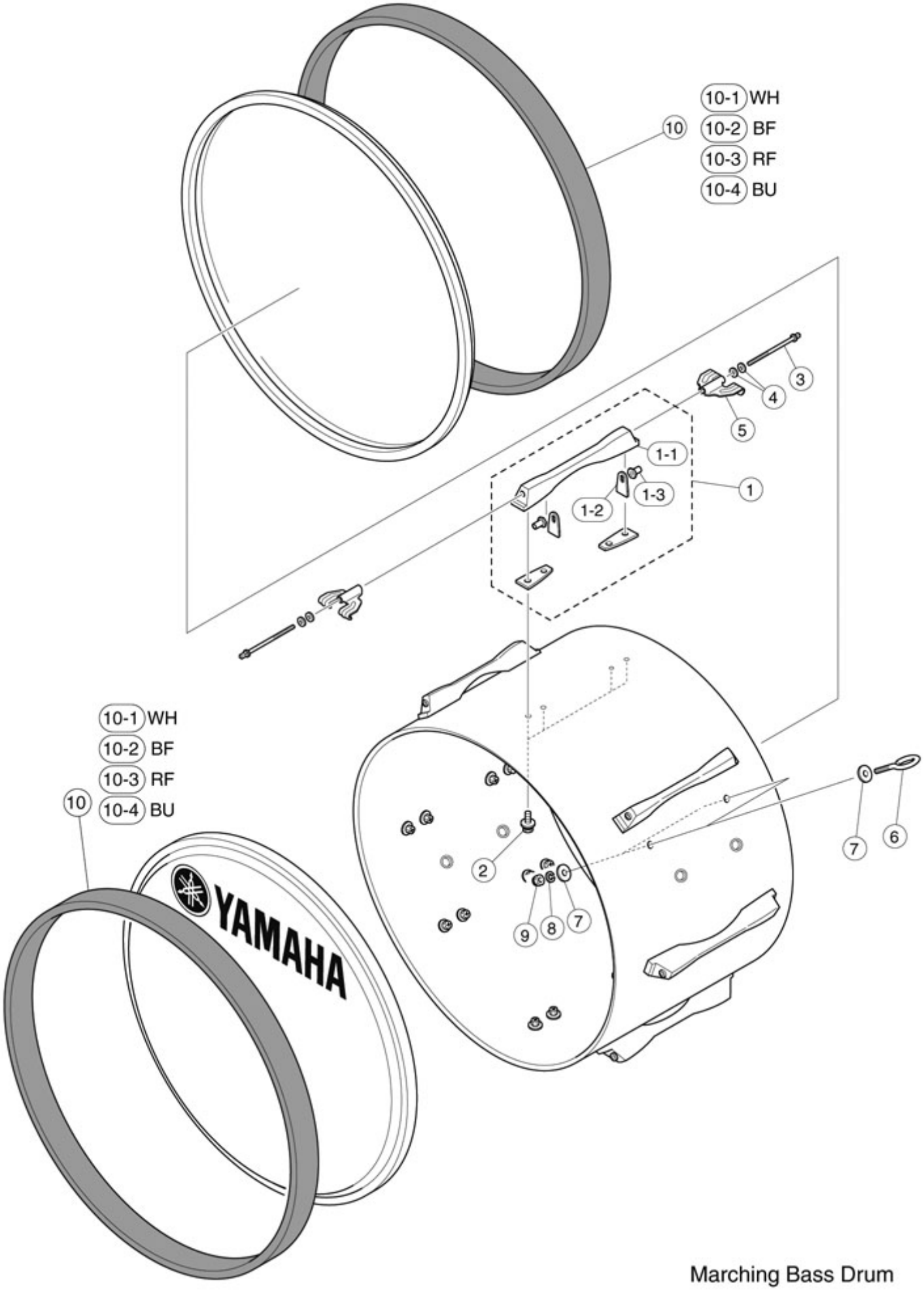

Marching Bass Drum

Model Name : MB-8324(U)

Ref No.	Parts No.(ChangeNo.)	English Name	Minimum Delivery	Accept order or not
1	W7916810	HT LUG ASSY MB CHN	1 PC	
1-1	W7710200	HT LUG MB	1 PC	
1-2	W7991610	LUG NUT HOLD PLATE MB-HT CHN	1 PC	
1-3	W7991310	LUG NUT 4 CHN	1 PC	
10-1	ZH420400	MB WOOD HOOP 24 W40R C WH	1 PC	
10-2	ZH420600	MB WOOD HOOP 24 W40R P BF	1 PC	
10-3	ZH420700	MB WOOD HOOP 24 W40R P RF	1 PC	
10-4	ZH420800	MB WOOD HOOP 24 W40R P BU	1 PC	
2	ZD191700	+ HEX BOLT SPC S/PW M5X14 MFZN2BL	1 PC	
3	U0043202	TENSION ROD L=115 MB4XXB	1 PC	
4	W8020110	TENSION ROD WASHER M6 CHN	1 PC	
5	W8006310	CLAW HOOK MB F CHN	1 PC	
6	W8032010	EYE HOO L-2 CHN	1 PC	
7	W8096510	PLAIN WASHER SPECIAL 6X20X1.6 MFNI33	1 PC	
8	ZD213300	SPRING WASHER #2 6 MFZN2Y	1 PC	
9	ZD216500	NYLON NUT #2 M6X6 MFZN2Y	1 PC	