Model Name : CSS-1465A

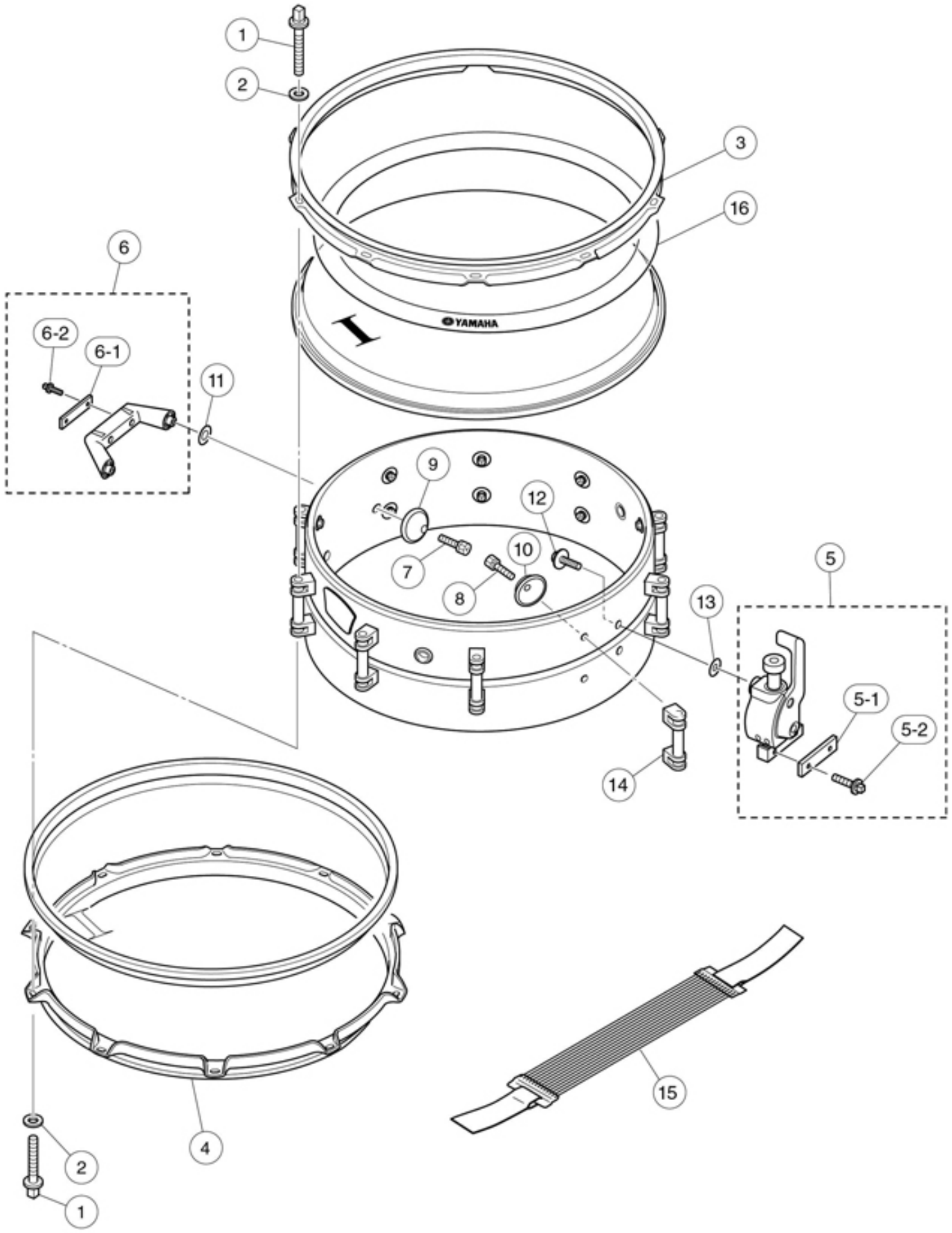

CSS
20150706

Model Name : CSS-1465A

Ref No.	Parts No.(ChangeNo.)	English Name	Minimum Delivery	Accept order or not
1	W8019020	TENSION ROD L-40 CHN CR	1 PC	
10	ZP915700	DOME WASHER 4.3X17.2X6 MFZN2BL	1 PC	
11	ZD040500	PP PLATE DIA.I/O=7.2/18	1 PC	
12	ZD216400	+ HEX BOLT SPC S/PW M4X12 MFZN2BL	1 PC	
13	ZD040300	PP PLATE DIA.I/O=4.1/17	1 PC	
14	W7953830	TUBE LUG ASSY 6.5 CHN 3	1 PC	
15	ZP376100	SNARE ASSY DT-TW	1 PC	
16	W7792110	RING MUTE MU-14S 2 CHN	1 PC	
2	W8020210	TENSION ROD WASHER 1 CHN	1 PC	
3	U0963280	DYNA HOOP 14X10H CUSTOM DRUM	1 PC	
4	W7757500	DYNA HOOP 3 14X10HS 1	1 PC	
5	ZJ211200	STRAINER ASSY Q MZCR2	1 PC	
5-1	WW791600	SNARE HOLDING PLATE 2 CHN	1 PC	
5-2	U0603480	DRUM KEY BOLT M5X13	1 PC	
6	ZJ218300	STRAINER ASSY DC 3 MZCR2	1 PC	
6-1	WW791600	SNARE HOLDING PLATE 2 CHN	1 PC	
6-2	ZQ027700	KEY BOLT M5X13 N	1 PC	Discontinued.
7	ZE156500	+ HEX BOLT SPC SW M5X12 MFZN2BL	1 PC	
8	ZP915100	+ HEX BOLT SPC SW M4X12 MFZN2BL	1 PC	
9	ZP915900	DOME WASHER 5.3X19.2X6 MFZN2BL	1 PC	