Model Name : CT-8013

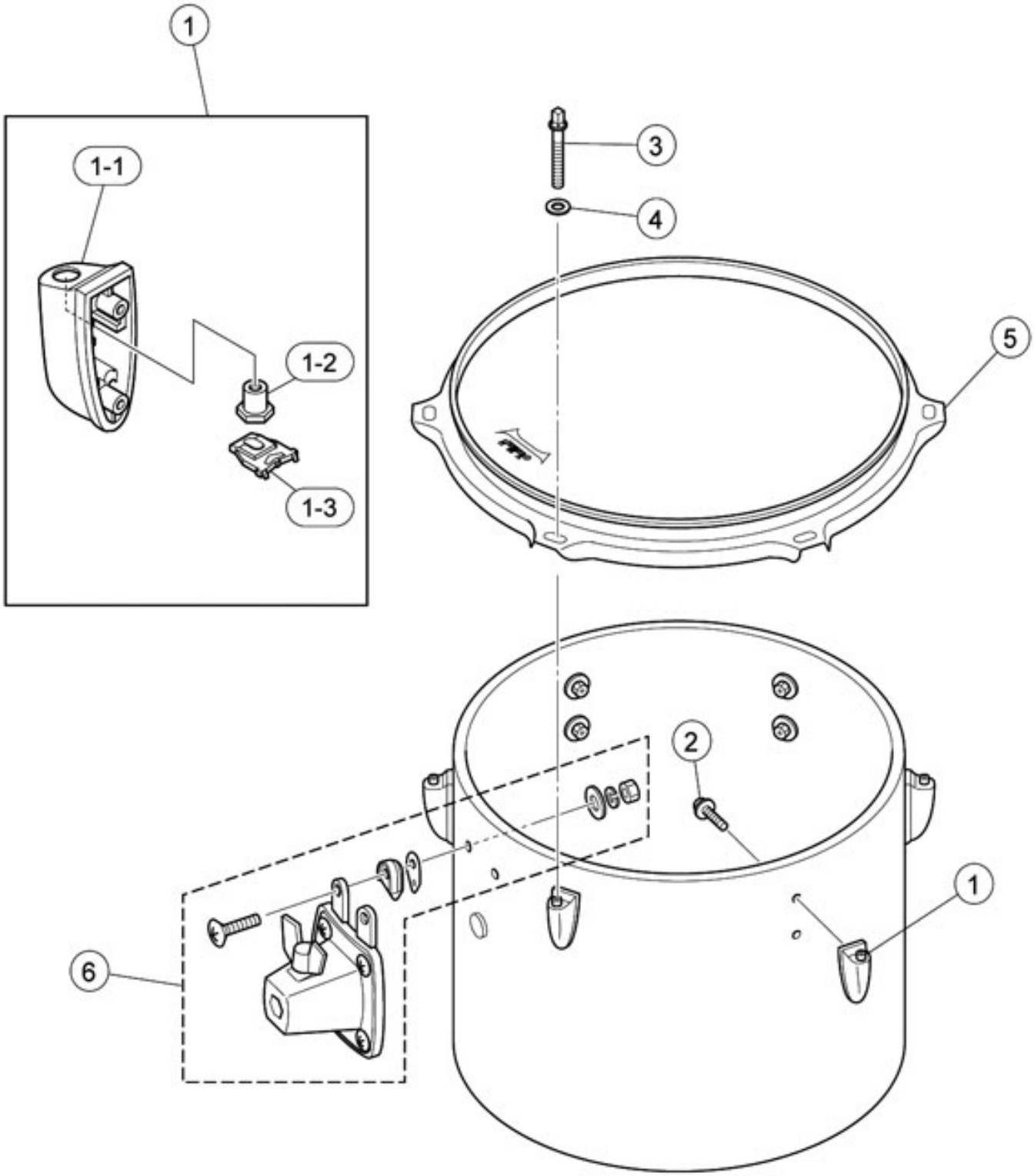

Model Name : CT-8013

Ref No.	Parts No.(ChangeNo.)	English Name	Minimum Delivery	Accept order or not
1-1	U0031033	FT,TT SEPARATE LUG (H) ASSY (CHN)	1 PC	
1-2	U0033240	LUG NUT (4)	1 PC	
1-3	U0037073	SD-HT LUG NUT HOLDING PLATE (2) (CHN)	1 PC	
2	U0035630	HEXAGONAL BOLT M4X12 ZY	1 PC	
3	U0043052	RIM TENSION ROD L=40	1 PC	
4	U0045010	WASHER	1 PC	
5	U0963240	DYNA HOOP 13X6H CUSTOM DURM	1 PC	