Model Name : CT-9010

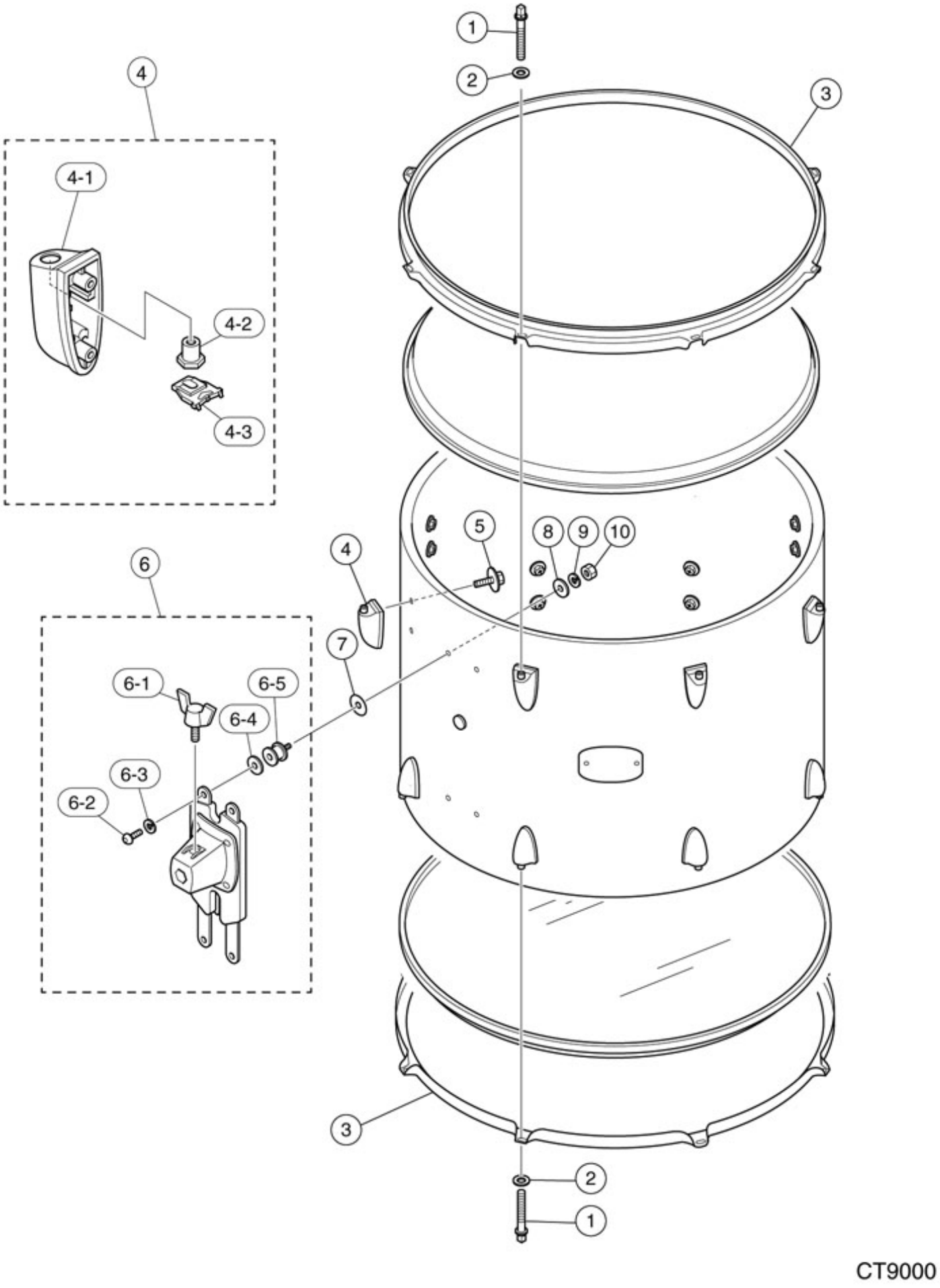

Model Name : CT-9010

Ref No.	Parts No.(ChangeNo.)	English Name	Minimum Order Quantity	Accept order or not
1	U0043052	RIM TENSION ROD L=40	1 PC	Discontinued.
10	W8100010	HEXAGON NUT #1 M6 MFZN2Y	1 PC	
2	U0045010	WASHER	1 PC	
3	U0963220	DYNA HOOP 10X6H CUSTOM DRUM	1 PC	
4	WY228200	SEPARATE LUG ASSY FT/TT H CHN 2	1 PC	
4-1	U0032442	FT,TT SEPARATE LUG (H) (CHN)	1 PC	
4-2	U0033240	LUG NUT (4)	1 PC	
4-3	ZC626100	LUG NUT HOLD PLATE 4	1 PC	
5	U0035640	HEXAGONAL BOLT M4X14 ZY	1 PC	
6	ZJ265800	TT MOUNT ASSY YESSIII 9	1 PC	
6-1	WW827700	YAMAHA BOLT M8X15 N CHN	1 PC	
6-2	ZJ379010	BOLT HEXAGON SOCKET M6X10 MFNI33	1 PC	
6-3	ZD213300	SPRING WASHER #2 6 MFZN2Y	1 PC	
6-4	W8096510	PLAIN WASHER SPECIAL 6X20X1.6 MFNI33	1 PC	
6-5	W8104500	RUBBER ISOLATOR M6 NUT/BOLT	1 PC	
7	WU267910	PP PLATE DIA.I/O=6/24 CHN	1 PC	
8	W8096510	PLAIN WASHER SPECIAL 6X20X1.6 MFNI33	1 PC	
9	ZD213300	SPRING WASHER #2 6 MFZN2Y	1 PC	