Model Name : CSM-1350A2

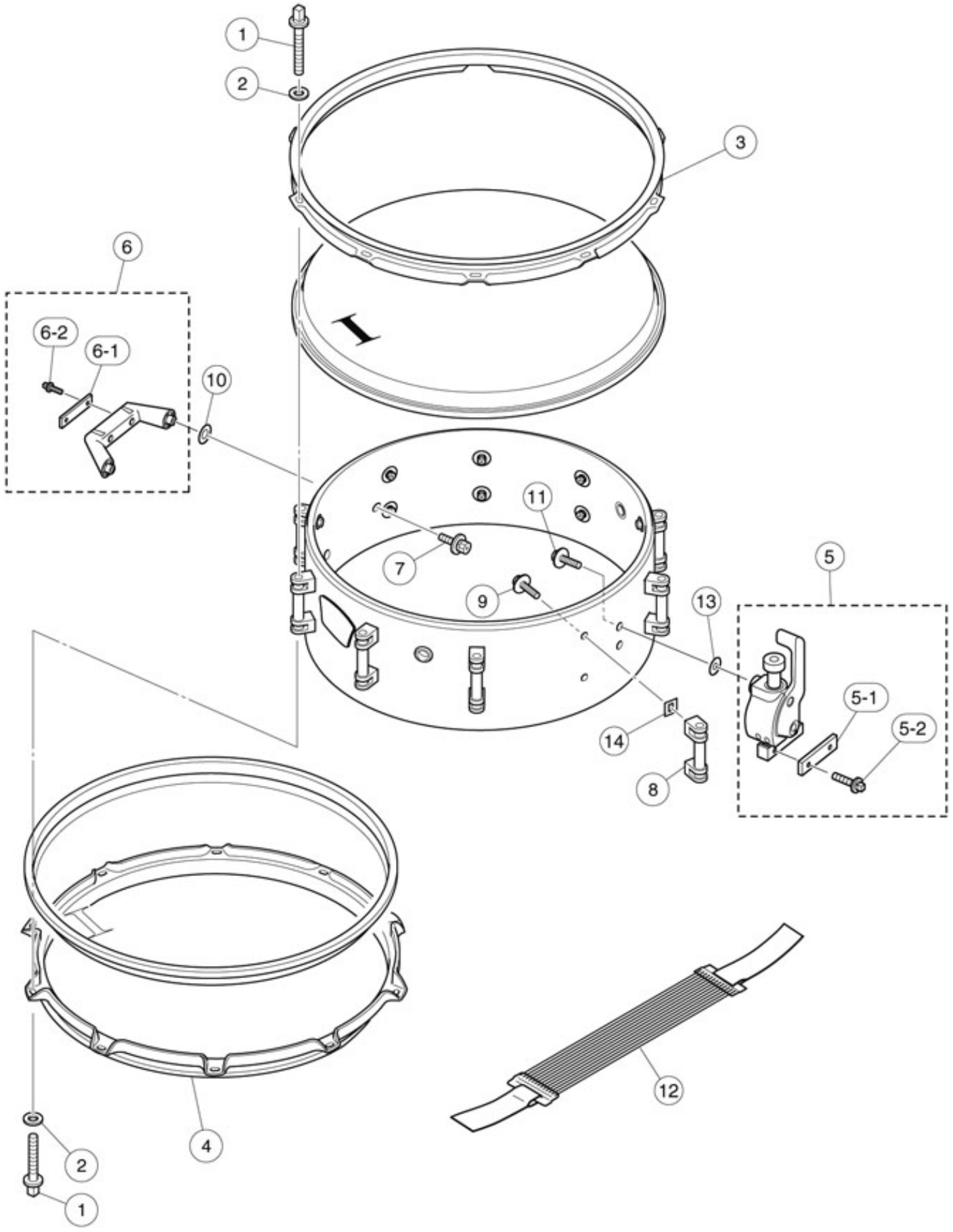

CSM

Model Name : CSM-1350A2

Ref No.	Parts No.(ChangeNo.)	English Name	Minimum Delivery	Accept order or not
1	W8019010	TENSION ROD L-40 CHN	1 PC	
10	ZD040500	PP PLATE DIA.I/O=7.2/18	1 PC	
11	ZD192800	+ HEX BOLT SPC S/PW M4X16 MFZN2BL	1 PC	
12	ZF565300	SNARE ASSY 13SW3 TW	1 PC	
13	ZD040300	PP PLATE DIA.I/O=4.1/17	1 PC	
14	ZH323200	LUG PLATE TUBE	1 ST	
2	U0045010	WASHER	1 PC	
3	U0066190	HOOP(2) 13X8H	1 PC	
4	U0066200	HOOP(2) 13X8HS1	1 PC	
5	ZJ211200	STRAINER ASSY Q MZCR2	1 PC	
5-1	WW791600	SNARE HOLDING PLATE 2 CHN	1 PC	
5-2	U0603480	DRUM KEY BOLT M5X13	1 PC	
6	ZJ218300	STRAINER ASSY DC 3 MZCR2	1 PC	
6-1	WW791600	SNARE HOLDING PLATE 2 CHN	1 PC	
6-2	W8020400	KEY BOLT M5X13	1 PC	
7	ZD191700	+ HEX BOLT SPC S/PW M5X14 MFZN2BL	1 PC	
8	W7953710	TUBE LUG ASSY 5 CHN	1 PC	
9	ZD216400	+ HEX BOLT SPC S/PW M4X12 MFZN2BL	1 PC	