Model Name : MS-6313U

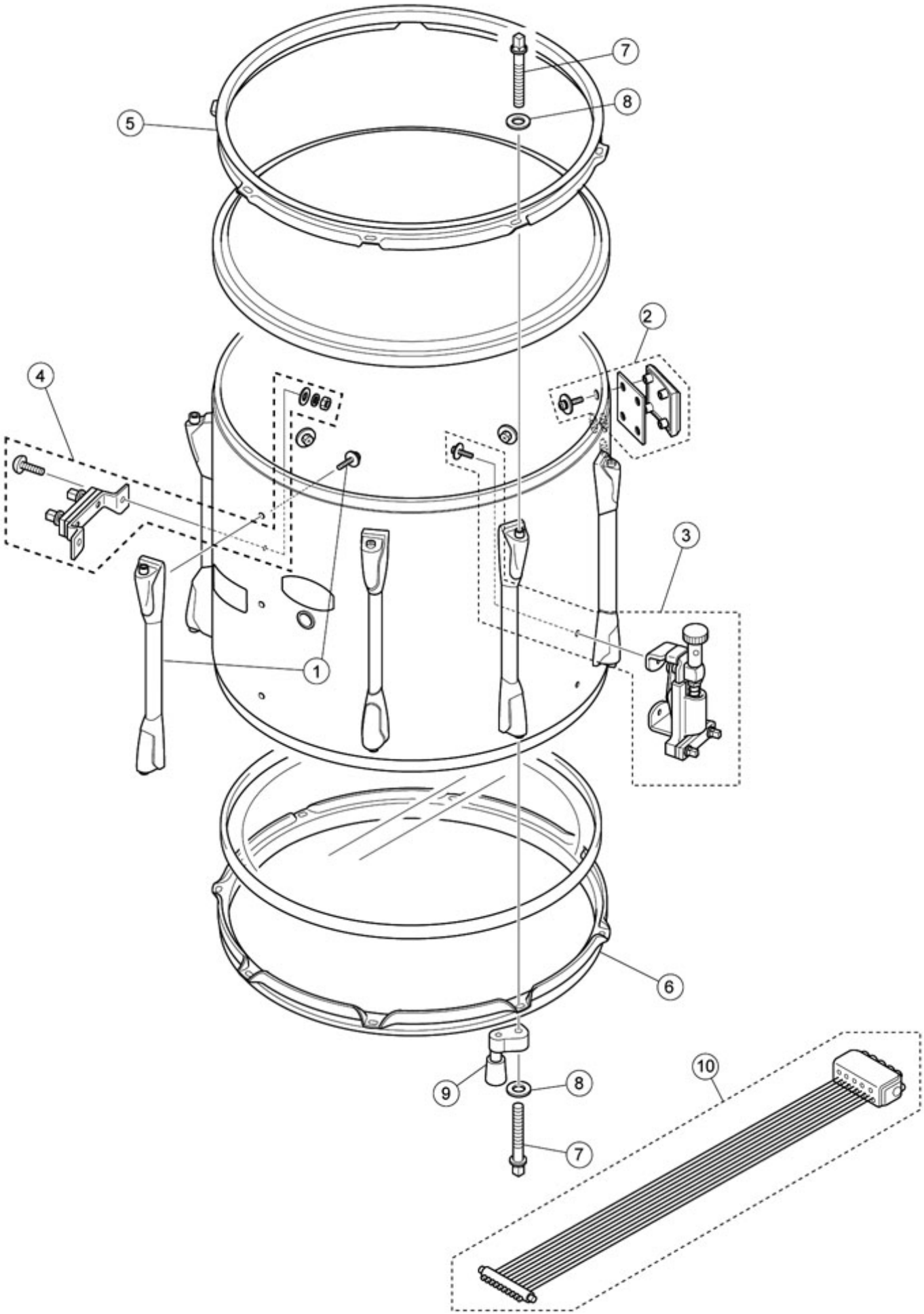

Model Name : MS-6313U

Ref No.	Parts No.(ChangeNo.)	English Name	Minimum Delivery	Accept order or not
1	U0030825	SD-HT LUG(2)M ASSY MS-81XX	1 PC	
2	U0142020	MOUNTING CLIP	1 PC	
3	U0201450	STRAINER RELEASE SIDE (B-8) L ASSY (CHN)	1 PC	
4	U0200082	STRAINER BUTT SIDE (B-3N) R ASSY (CHN)	1 PC	
5	U0066190	HOOP(2) 13X8H	1 PC	
6	U0066200	HOOP(2) 13X8HS1	1 PC	
9	U0140301	GUARD LEG ATTACHMENT ASS'Y MS814	1 PC	