Model Name : CB-7028(U)

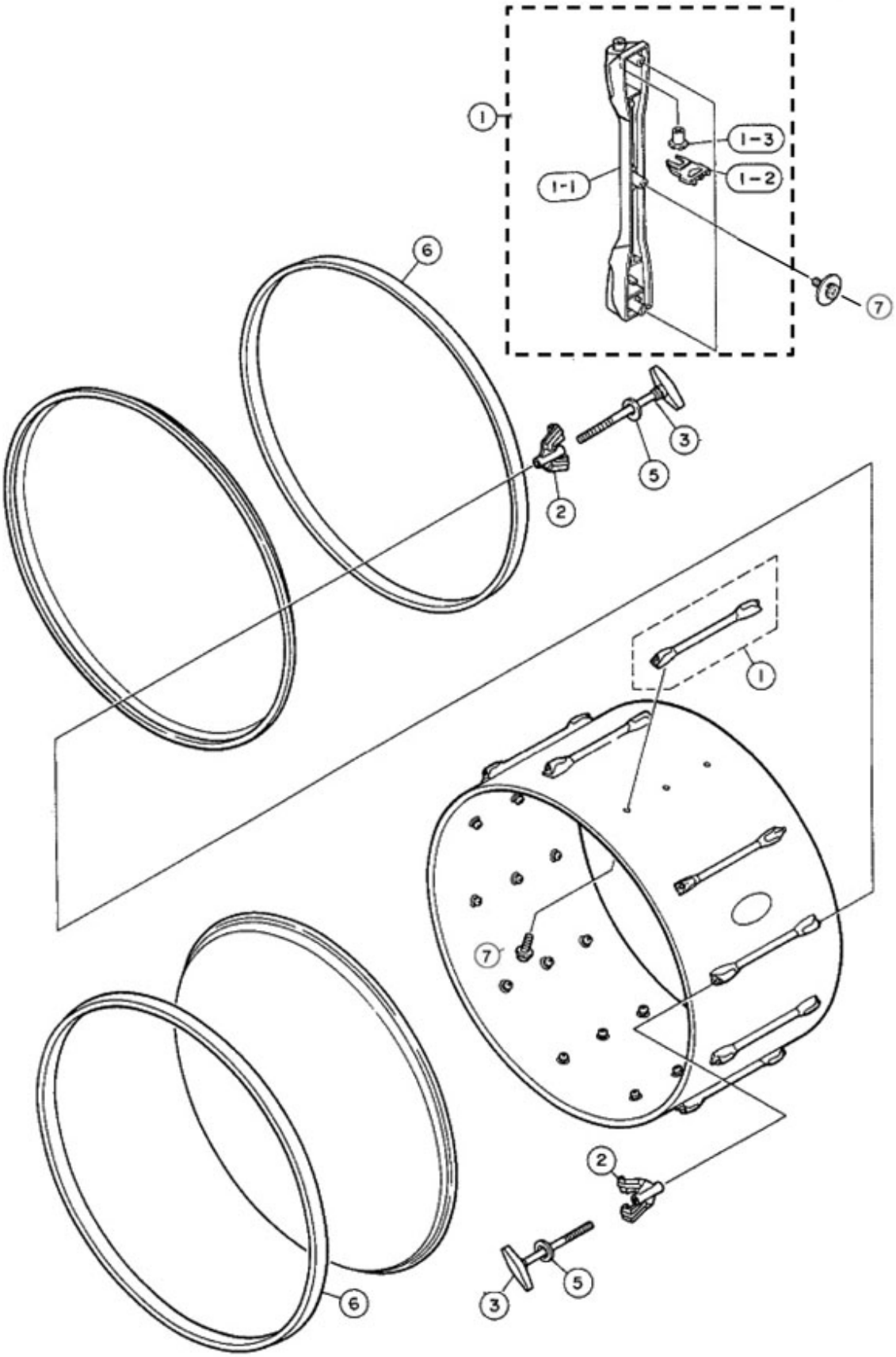

Model Name : CB-7028(U)

| Ref No. | Parts No.(ChangeNo.) | English Name | Minimum Delivery | Accept order or not |
|---|---|---|---|---|
| 1 | W8023210 | HT LUG ASSY BD 2-MD CHN | 1 PC | |
| 1-1 | W7709910 | HT LUG BD 2-MD CHN | 1 PC | |
| 1-2 | W7788700 | LUG NUT HOLD PLATE BD-HT 3 | 1 PC | |
| 1-3 | W7991310 | LUG NUT 4 CHN | 1 PC | |
| 2 | W8006610 | CLAW HOOK 6 CHN | 1 PC | |
| 3 | U0043600 | BD RIM TENSION ROD(6) L-100 11xx/15xx | 1 PC | |
| 5 | W8020110 | TENSION ROD WASHER M6 CHN | 1 PC | |
| 6 | ZH423000 | CB WOOD HOOP 28 W40 DKW | 1 PC | |
| 7 | ZD216400 | + HEX BOLT SPC S/PW M4X12 MFZN2BL | 1 PC | |